• General Description

It combines advanced trench MOSFET technology with a low resistance package to provide extremely low $R_{DS(ON)}$. This device is ideal for load switch and battery protection applications.

• Features

- ■AEC-Q101 Qualified
- ■Low $R_{DS(ON)}$ to minimize conductive loss
- ■Low Gate Charge for fast switching
- ■Low Thermal resistance

•Application

- ■SMPS 2nd Synchronous Rectifier
- ■BLDC Motor driver
- ■DC/DC

• Product Summary

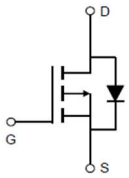

V_{DS} =-100V

$R_{DS(ON)}$ =400mΩ

I_D =-1.8A

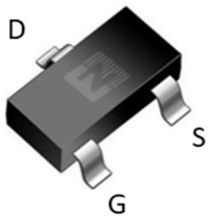

SOT23-3

•Ordering Information:

Part NO.	ZMA036KP10T
Marking	36KP10
Packing Information	REEL TAPE
Basic ordering unit (pcs)	3000

•Absolute Maximum Ratings (T_C =25℃)

Parameter	Symbol	Conditions	Rating	Unit
Drain-Source Voltage	V_{DS}	25 °C ≤ T_j ≤ 150°C	-100	V
Gate-Source Voltage	V_{GS}	Pulsed ①	+20/-20	V
Continuous Drain Current	I_D	T_C=25℃	-1.8	A
	I_D	T_C=75℃	-1.4	A
	I_D	T_C=100℃	-1.1	A
Pulsed Drain Current	I_{DM}	pulsed; t_p ≤ 10 μs; T_{mb} = 25 °C;	-5.4	A
Total Power Dissipation	P_D	T_C=25℃	9.6	W
Total Power Dissipation	P_D	T_A=25℃	0.7	W
Operating Junction Temperature	T_J		-55 to 150	℃
Storage Temperature	T_{STG}		-55 to 150	℃
Single Pulse Avalanche Energy	E_{AS}	L=0.1mH, VGS=10V, Rg=25Ω, T_J=25℃	6	mJ
ESD Level (HBM)			Class 1C	

•Thermal resistance

Parameter	Symbol	Min.	Typ.	Max.	Unit
Thermal resistance, junction - case	R_{thJC}	-	-	13	° C/W
Thermal resistance, junction - ambient	R_{thJA}	-	-	180	° C/W
Soldering temperature	T_{sold}	-	-	260	° C

•Electronic Characteristics

Parameter	Symbol	Condition	Min.	Typ	Max.	Unit
Drain-Source Breakdown Voltage	BV_{DSS}	V_{GS} =0V, I_D =-250uA	-100			V
Gate Threshold Voltage	$V_{GS(TH)}$	V_{GS} =V_{DS}, I_D =-250uA	-1.2		-2.5	V
Drain-Source Leakage Current	I_{DSS}	V_{DS}=-100V, V_{GS} =0V			1.0	uA
Gate- Source Leakage Current	I_{GSS}	V_{GS}=±20V, V_{DS} =0V			±100	nA
Static Drain-source On Resistance	$R_{DS(ON)}$	V_{GS}=-10V, I_D=-1.8A		360	430	mΩ
		V_{GS}=-6V, I_D=-1.6A		450	600	mΩ
Forward Transconductance	g_{FS}	V_{DS} =-10V, I_D=-1.0 A		5		S
Source-drain voltage	V_{SD}	Is=-1.8A			-1.28	V

•Electronic Characteristics

Parameter	Symbol	Condition	Min.	Typ	Max.	Unit
Input capacitance	Ciss	VDS=-25V f = 1MHz	-	818	-	pF
Output capacitance	Coss		-	22	-	
Reverse transfer capacitance	Crss		-	15	-	
Gate Risistance	Rg	f = 1MHz	-	8.3	-	Ω

•Gate Charge characteristics(T_a = 25℃)

Parameter	Symbol	Condition	Min.	Typ	Max.	Unit
Total gate charge	Qg	V_{DD} = -25V I_D = -1.8A V_{GS} = -10V	-	12	-	nC
Gate - Source charge	Qgs		-	2.6	-	
Gate - Drain charge	Qgd		-	2	-	

Fig.1 Power Dissipation Derating Curve

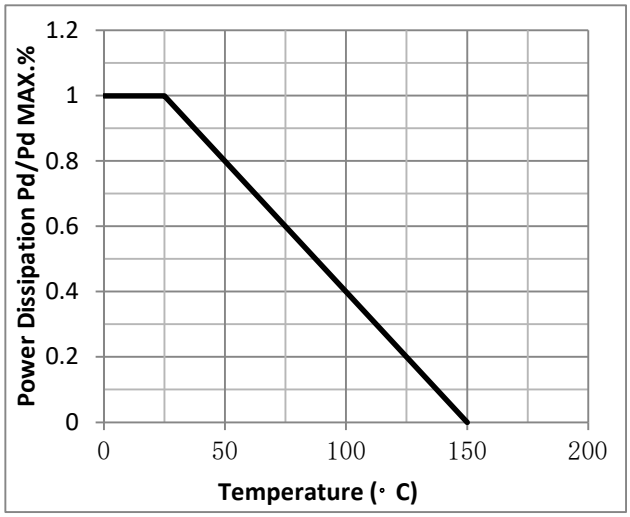

Fig.2 Typical output Characteristics

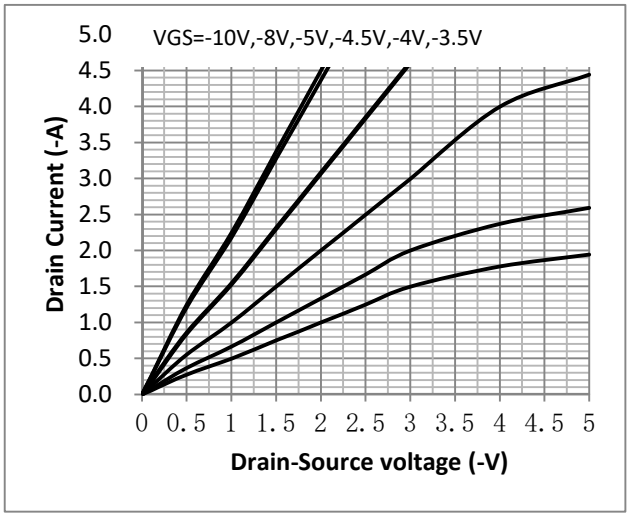

Fig.3 Threshold Voltage V.S Junction Temperature

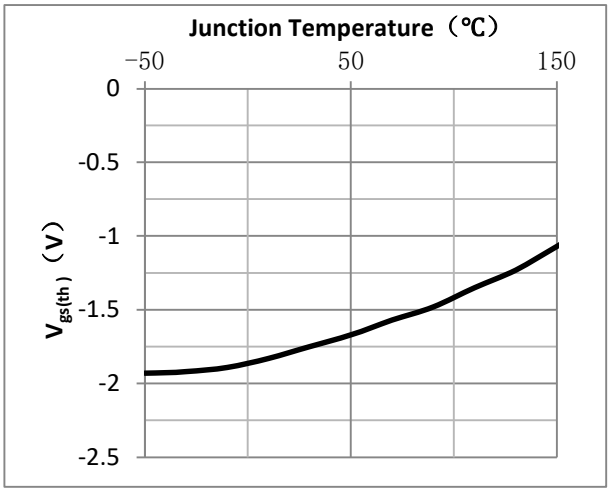

Fig.4 Resistance V.S Drain Current

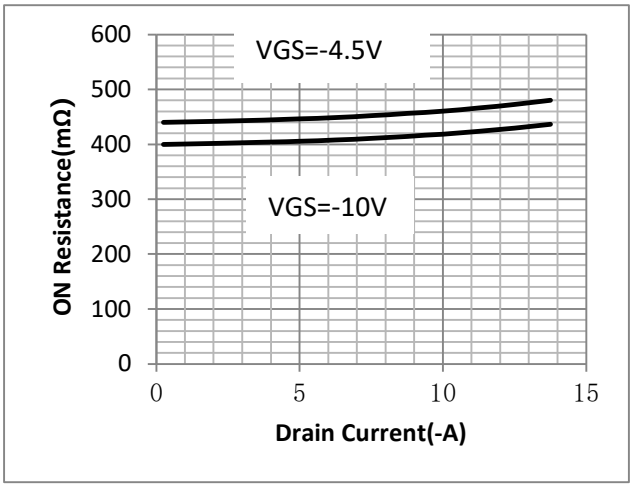

Fig.5 On-Resistance VS Gate Source Voltage

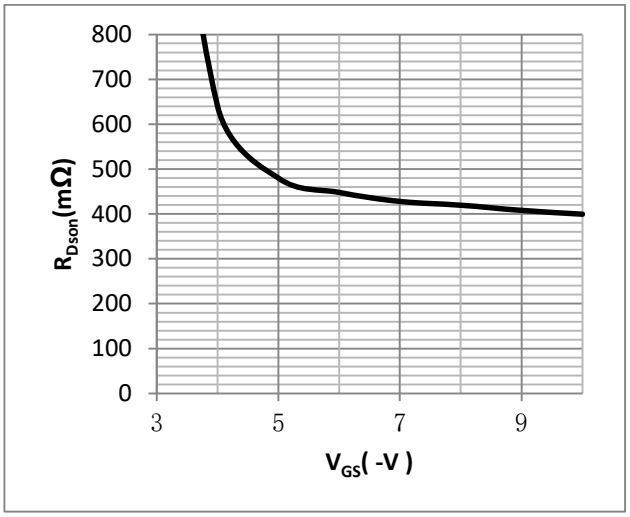

Fig.6 On-Resistance V.S Junction Temperature

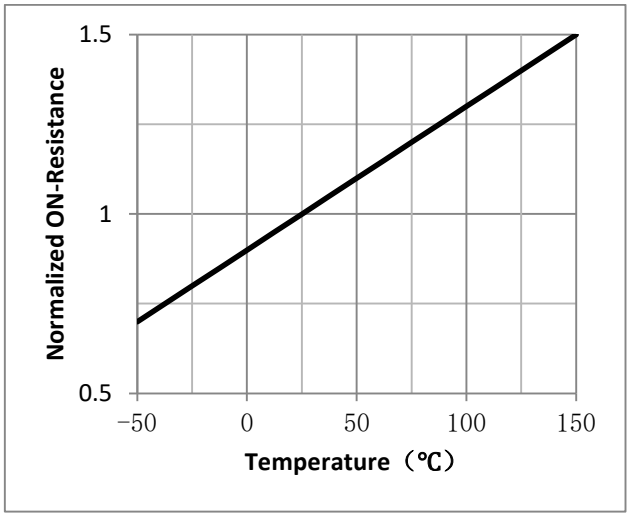

Fig.7 Gate-Charge Characteristics

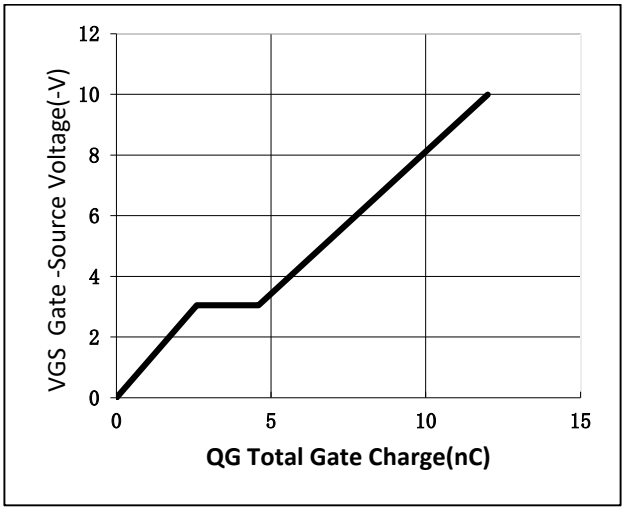

Fig.8 Capacitance Characteristics

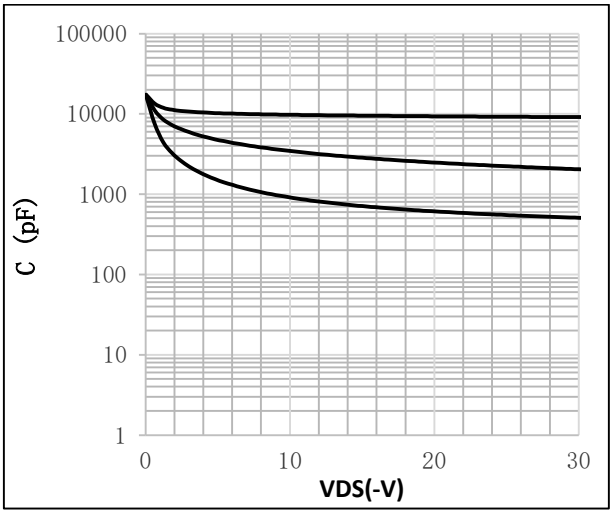

Fig.9 Maximum Forward Biased Safe Operating Area

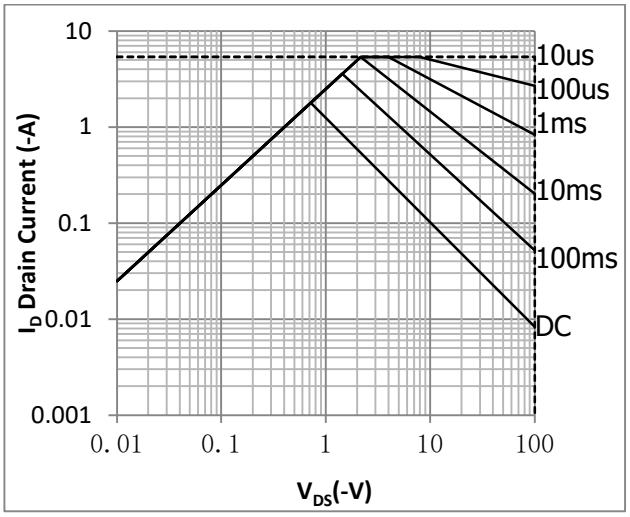

Fig.10 ID-Junction Temperature

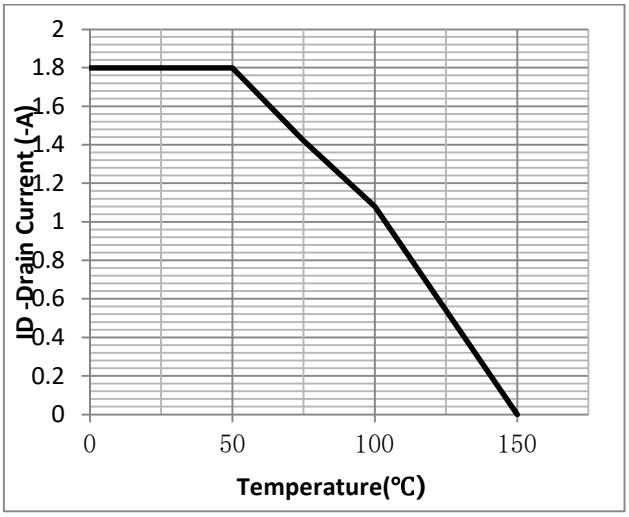

Figure 11. Diode Forward Voltage vs. Current

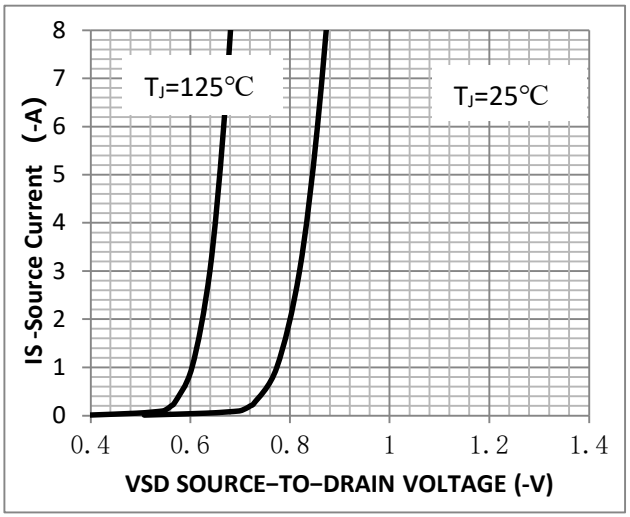

Figure 12. Transfer Characteristics

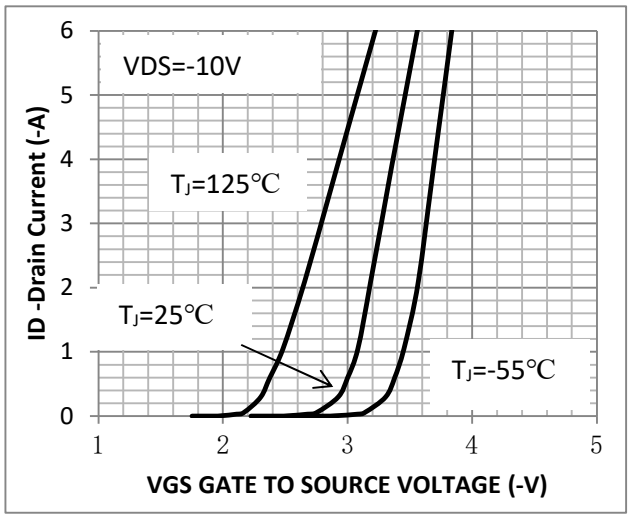

Fig.7 Gate Charge Measurement Circuit

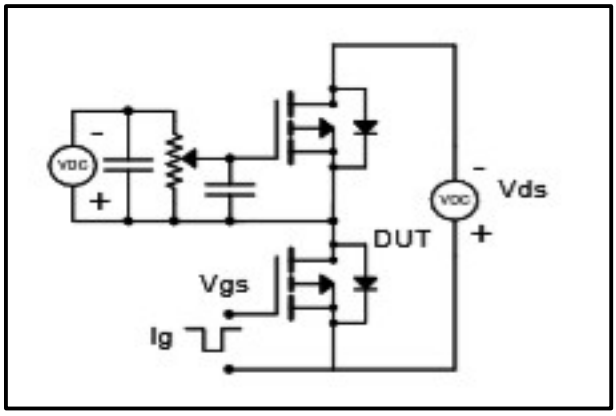

Fig.8 Gate Charge Waveform

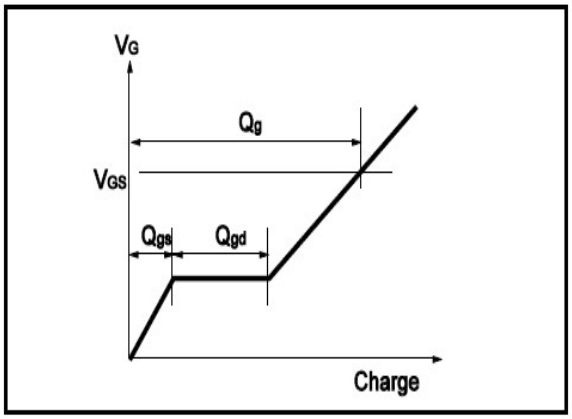

Fig.9 Switching Time Measurement Circuit

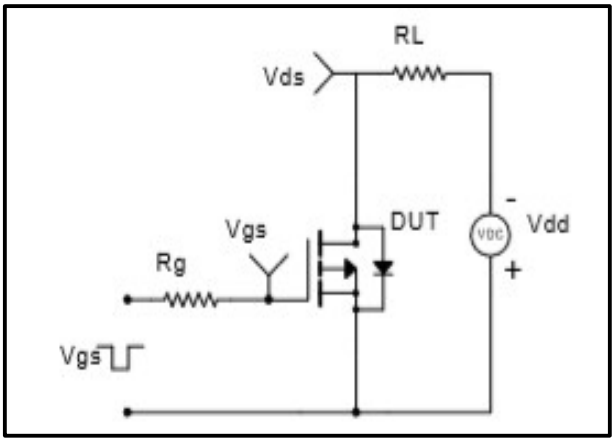

Fig.10 Switching Time Waveform

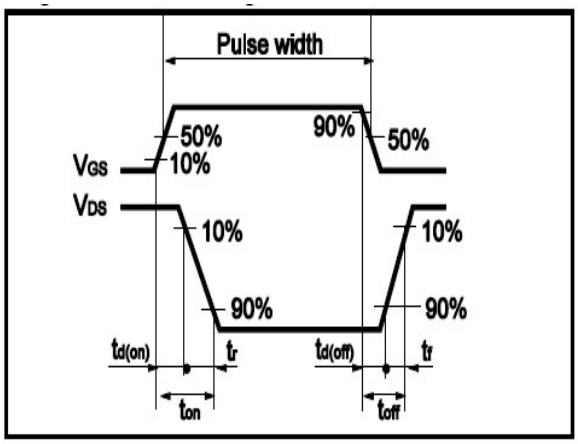

Fig.11 Avalanche Measurement Circuit

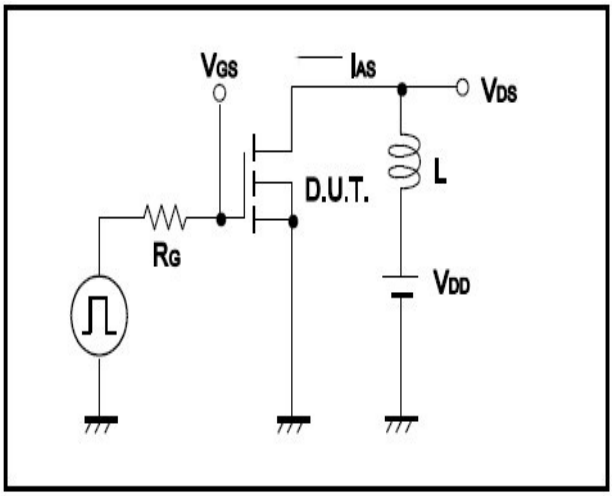

Fig.12 Avalanche Waveform

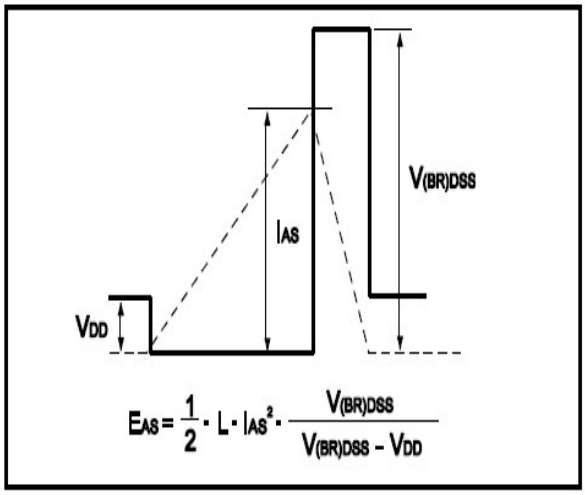

●Dimensions(SOT23-3)

Unit：mm

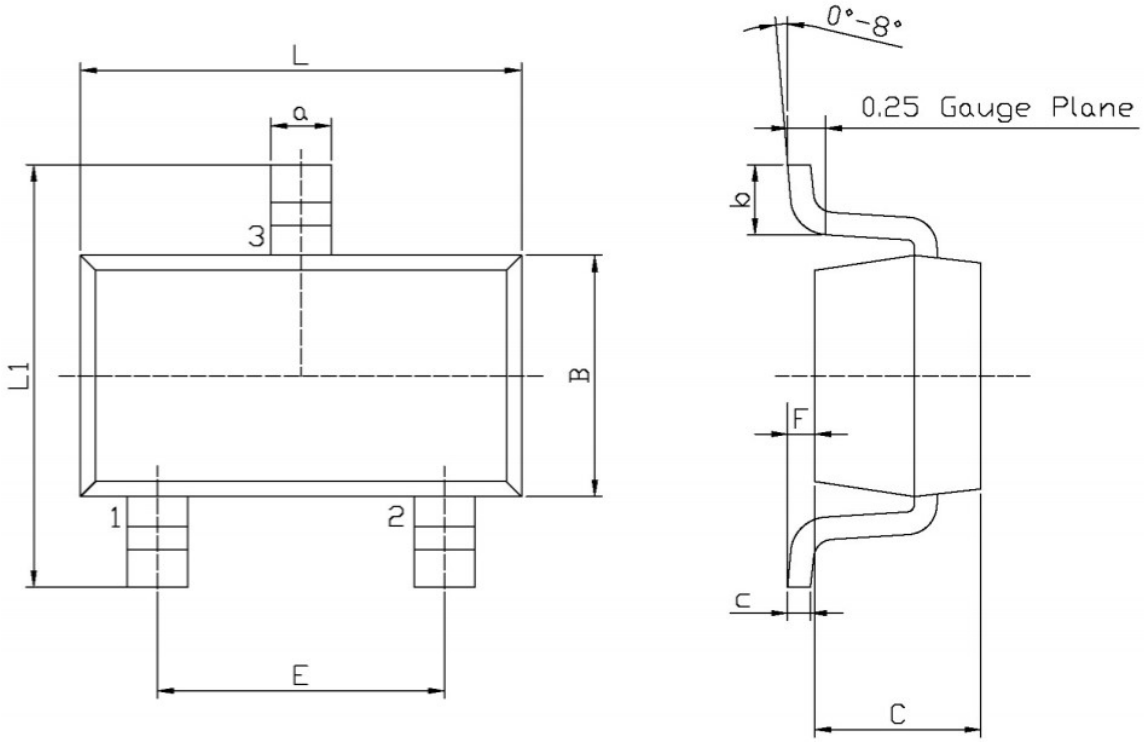

Unit: mm

Symbol	Dimensions In Millimeters		Symbol	Dimensions In Millimeters	
	Min	Max		Min	Max
L	2.82	3.02	a	0.35	0.50
B	1.50	1.70	c	0.10	0.20
C	0.90	1.30	b	0.35	0.55
L1	2.60	3.00	F	0	0.15
E	1.80	2.00			

Note: ① Pulse Test: Pulse width ≤ 300μs, Duty cycle ≤ 2%, Accumulation time ≤50 hours;

② Device mounted on FR-4 substrate PC board, 2oz copper, with thermal bias to bottom layer 1inch square copper plate；

③ Vgs<-4.5V is required for practical application.

Disclaimer

● Reproducing and modifying information of the document is prohibited without permission from ZMJ SEMICONDDUCTORS CO.,LTD.

● ZMJ SEMICONDDUCTORS CO.,LTD. reserves the rights to make changes of the content herein the document anytime without notification. Please refer to our website for the latest document.

● ZMJ SEMICONDDUCTORS CO.,LTD. disclaims any and all liability arising out of the application or use of any product including damages incidentally and consequentially occurred.

● ZMJ SEMICONDDUCTORS CO.,LTD. does not assume any and all implied warranties, including warranties of fitness for particular purpose, non-infringement and merchantability.

● Applications shown on the herein document are examples of standard use and operation. Customers are responsible in comprehending the suitable use in particular applications. ZMJ SEMICONDDUCTORS CO.,LTD. makes no representation or warranty that such applications will be suitable for the specified use without further testing or modification.

● The products shown herein are not designed and authorized for equipments relating to human life and for any applications concerning life-saving or life-sustaining, such as medical instruments, aerospace machinery et cetera. Customers using or selling these products for use in such applications do so at their own risk and agree to fully indemnify ZMJ SEMICONDDUCTORS CO.,LTD. for any damages resulting from such improper use or sale.

● Since ZMJ uses lot number as the tracking base, please provide the lot number for tracking when complaining.